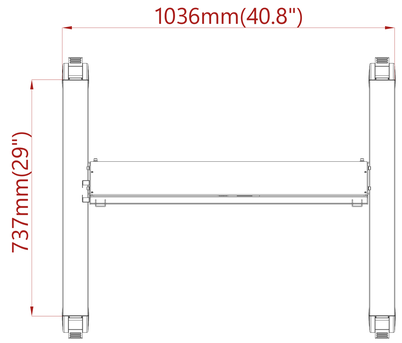

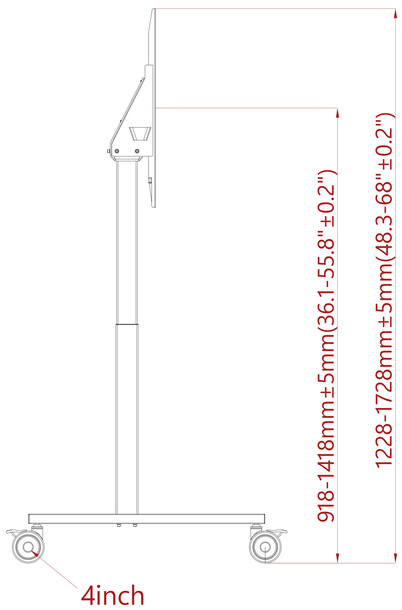

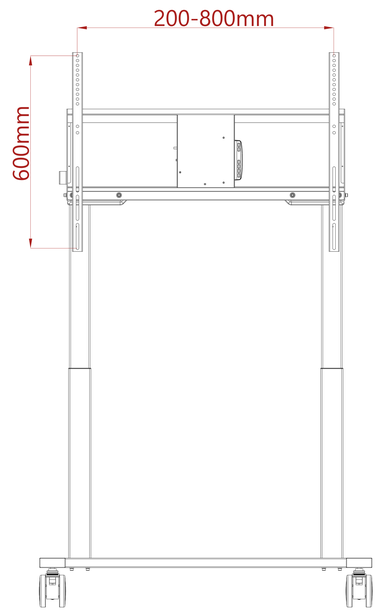

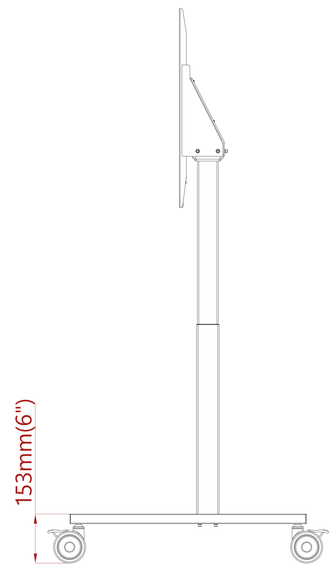

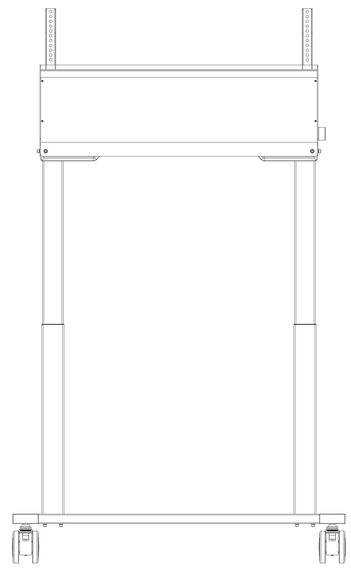

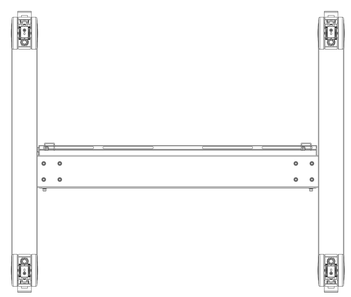

TOLERANCES (Unless Otherwise Stated)	
DECIMALS	TOLERANCES
≤63	±0.10
63<x≤160	±0.15
160<x≤400	±0.20
400<x≤1000	±0.25
>1000	±0.3
Angle	±0.3°

(This tolerance standard applies only to CNC-machined parts.)

THIRD ANGLE PROJECTION

AVTEK, VIDIS S.A.

MODEL NO.	AVTEK ELECTRIC STAND V4			NOTES
PART NO.	1MV137	SCALE	1:1	\
PART NAME	Overall Unit – 6 Views	SIZE	N/A	
UNIT	mm	SHEET	1/1	
MATERIAL.	SPCC		CHK'D	
SURFACE	Black		APP'D	