BT8312

Slimline Soft-Open Full Service Videowall Mount

Installation Guide

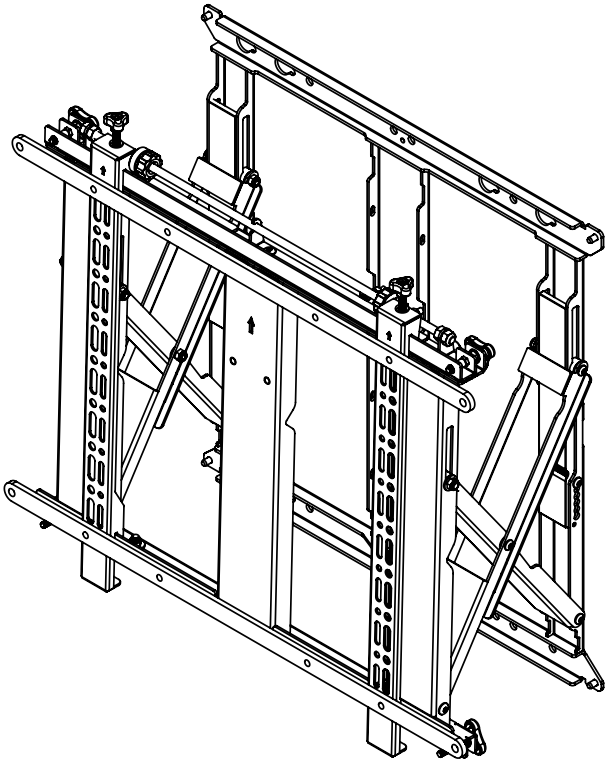

- Designed for screens up to 50kg (110lbs)
- Recommended screen size 42” - 75”
- Modular mount for unlimited video wall displays
- Fits screens with VESA® mounting patterns from 200 x 100mm up to 600 x 400mm
- Suitable for landscape or portrait screen mounting
- Tool-less micro-adjustment at 8 points for a seamless alignment of the wall display
- Pop-out system with soft opening provides quick and easy service access

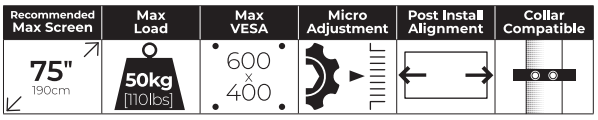

Contents

BT8312

	Pg
Installation Safety Notes	2
Parts List	4
Installation Instructions	5
Recess Mounting	13
Product Dimensions	14
B-Tech Contact Details	16

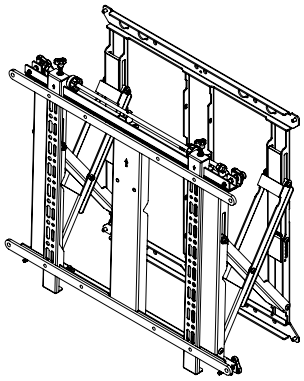

Installation Safety Instructions

Caution: This mount is intended for use only with the maximum weights indicated. Use with equipment heavier than the maximum indicated may result in instability causing possible injury.

Do not attempt to install this product until all instructions and warnings have been read and properly understood. *Please keep these instructions for future reference.*
Please check carefully to make sure there are no missing or defective parts - defective parts must never be used.
B-Tech AV Mounts, its distributors and dealers are not liable or responsible for damage or injury caused by improper installation, improper use or failure to observe these safety instructions. In such cases, all guarantees will expire.

General

B-Tech AV Mounts recommends that a professional AV installer or other suitably qualified person install this product. Great care must always be taken during installation as most AV equipment is of a fragile nature, possibly heavy and easily damaged if dropped. If you do not fully understand the instructions or are not sure how to install this product safely, then please consult a professional for advice and/or to install this product for you. Failure to mount this product correctly may cause serious injury or death both during installation and at any time thereafter. Do not mount any AV equipment that exceeds the specific weight limit of the product you are installing. This weight limit will be clearly stated on each product and its packaging and will vary from product to product.

Product location

Please pay careful attention to where this product is located. Check load capacity of the wall prior to installation as some surfaces are not suitable for installation. Designed for indoor use, this mount is suitable for public or home installation. If located in a public or frequently populated area ensure that the product is out of the immediate reach of people. If any AV equipment is to be suspended over the likely path or location of people then great care should be taken to secure all parts of the installation from falling. When drilling holes it is essential to avoid contact with electrical cables and water or gas pipes contained within. Use of a good quality live wire detector and hidden object locator is therefore recommended. Only drill into structures when you are sure it is safe to do so.

Fixing hardware

It is highly recommended that all fixing screws be used where supplied and that the purpose of all other fixing hardware is fully understood. In some cases more AV equipment fixing hardware will be supplied to accommodate different models of equipment and set up configurations. The installer must be satisfied that any supplied fixing hardware is suitable for each specific installation. The fixing kit supplied with the product may not be suitable for all walls. If any fixing screws or included hardware are deemed not sufficient for a safe installation then please consult a professional or your local hardware store.

Hazard limitation

When routing cables take advantage of any built in cable management features that the product might provide and ensure that all cables are tidy and secure. Check to see that any moving aspect of the product can do so unhindered by any cabling. Some products have moving parts and the potential to cause injury through the crushing or trapping of fingers or other body parts. Particular attention to the nature of moving parts is required especially when assembling installing and adjusting during set up. Immediately after installation double-check that the work done is safe and secure. Double-check all necessary fixings are present and are of ample tightness. It is recommended that periodic inspections of the product and its fixing points are made as frequently as possible (no more than 6 months apart) to ensure that safety is maintained. If in doubt consult a professional AV installer or other suitably qualified person.

CN B-Tech AV Mounts 建议本产品由专业AV安装人员或其他合格人员安装。 B-Tech AV Mounts 及它的代理商、经销商不对由于不恰当的安装而造成的损失或伤害负责。 本产品必须安装在合适的架构上，并仅用于不超过所标示的最大承重。

CS Společnost B-Tech AV Mounts doporučuje provést instalaci tohoto produktu instalátora AV či jinak způsobilé osoby. Společnost B-Tech AV Mounts, její distributoři a prodejci nenesou prostřednictvím odborného odpov ědnost za škody nebo zranění zp ůsobená nevhodnou instalací. Tento výrobek je nutno umístit do vhodné konstrukce a používat jen po uvedenou maximální výšku.

DE B-Tech AV Mounts empfiehlt, dass dieses Produkt durch einen qualifizierten AV-Techniker oder eine andere Person mit geeigneter Qualifikation installiert wird. B-Tech AV Mounts, ihre Distributoren und Händler können nicht für durch fehlerhafte Montage verursachte Beschädigung oder Verletzung haftbar bzw. verantwortlich gemacht werden. Dieses Produkt muss auf einem geeigneten Untergrund montiert werden und darf nur bis zum angegebenen Höchstgewicht verwendet werden.

EN B-Tech AV Mounts recommends that this product be installed by a qualified AV technician or other suitably qualified person. B-Tech AV Mounts, its distributors and dealers are not liable or responsible for damage or injury caused by improper installation, improper use or failure to observe these safety instructions. In such cases, all guarantees will expire. This product must be mounted on a suitable surface and may only be used up to the specified maximum weight.

ES B-Tech AV Mounts recomienda que un instalador de audio y video profesional u otra persona debidamente cualificada instalen este producto. B-Tech AV Mounts, sus distribuidores y concesionarios no se hacen cargo ni se responsabilizan de ningún daño o lesión provocados por una instalación inapropiada. Este producto se debe montar en una estructura adecuada y se debe utilizar soportando solamente hasta el peso máximo indicado.

FR B-Tech AV Mounts recommande de confier l'installation de ce produit à un installateur AV professionnel ou à une autrepersonne dûment qualifiée. B-Tech AV Mounts, ses distributeurs et ses revendeurs ne sauraient être tenus responsables de tout dégât ou de toute blessure résultant d'une installation incorrecte. Ce produit doit être monté sur un support approprié et utilisé dans la limite du poids maximum indiqué.

IT B-Tech AV Mounts consiglia di affidare l'installazione di questo prodotto a un installatore specializzato o ad altra personaadeguatamente qualificata. B-Tech AV Mounts, i suoi distributori e rivenditori non accettano alcuna responsabilità nei riguardi di eventuali danni o infortuni causati da un'errata installazione. Questo prodotto deve essere fissato a una struttura idonea e utilizzato unicamente sino al peso massimo indicato.

JP B-Tech AV Mounts はAV設置の専門家または適合した知識を備えた人が製品を設置することを推奨します。 B-Tech AV Mountsと販売店、取引先はこうした安全指針に従わない場合に随伴される製品の損傷や傷害に対する責任を負いません。 場合によって製品が設置されるに適していないところもあるので設置位置に特別な注意を傾けてください。この製品の位置に注意を傾けて設置に適していない壁がいるかを確認してください。 指定した重さ制限を超過するAV装備を装着しないでください。

KR B-Tech AV Mounts 는 AV 설치 전문가 또는 적합한 지식을 갖춘 사람이 제품을 설치하도록 권장합니다. B-Tech AV Mounts 와 판매점, 거래처는 이러한 안전 지침을 따르지 않을 경우에 수반될 제품의 손상이나 상해에 대한 책임을 지지 않습니다. 경우에 따라 제품이 설치되기에 적합하지 않은 곳들도 있으므로 설치 위치에 특별한 주의를 기울여 주시기 바랍니다. 제품의 설치 위치에 주의를 기울여 확인하십시오. 지정된 무게 제한을 초과하는 AV 장비를 장착하지 마십시오.

NL B-Tech AV Mounts adviseert om dit product te laten installeren door een professionele AV-installateur of andere hiervoor gekwalificeerde persoon. B-Tech AV Mounts , haar distributeurs en dealers zijn niet aansprakelijk of verantwoordelijk voor schade of letsel die is veroorzaakt door onoordeelkundige installatie. Dit product moet worden gemonteerd aan een geschikte constructie, waarbij het aangegeven maximum gewicht niet mag worden overschreden.

PL Firma B-Tech AV Mounts zaleca, aby ten produkt był instalowany przez profesjonalnych instalatorów AV lub inny odpowiednio przeszkolony personel. Firma B-Tech AV Mounts, jej dystrybutorzy i dealerzy nie ponoszą odpowiedzialności za uszkodzenia lub obrażenia ciała powstałe w wyniku nieprawidowej instalacji. Niniejszy produkt musi być amontowany na odpowiedniej powierzchni, a podczas użytkowania nie wolno przekraczać podanego maksymalnego obciążenia.

PT A B-Tech AV Mounts recomenda que a instalação deste produto seja efectuada por um instalador de AV instalador de AV profissional ou outra pessoa devidamente habilitada. A B-Tech AV Mounts e os seus distribuidores e concessionários não são responsáveis por danos ou lesões causados por uma instalação incorrecta. Este produto tem de ser montado numa estrutura adequada e utilizado somente até ao peso máximo indicado.

RU Компания B-Tech AV Mounts рекомендует, чтобы установка данного изделия производилась инженером по установке аудтио-видеотехники или другим специалистом с соответствующей квалификацией. Компания B-Tech AV Mounts ее дистрибьюторы и дилеры не несут ответственности за повреждения или травмы, полученные в результате неправильной установки.

توصي بي- تك للتجارة الدولية المحدودة بأن شخص محترف فى تركيب ال AV او شخص مؤهل تأهيلا مناسبا لتركيب هذا المنتج. بي- تك للتجارة الدولية، موزعيها والتجار ليست عرضة أو مسؤولة عن الأضرار أو الإصابات الناجمة عن تركيب غير سليم، والاستخدام غير السليم أو عدم مراعاة هذه التعليمات للسلامة. يجب أن يتم تركيب هذا المنتج فى بنية مناسبة ويجب استخدامة فقط لدعم الحد الأقصى للوزن المشار إليه.

BT8312 **Parts List**

Please keep this for future reference

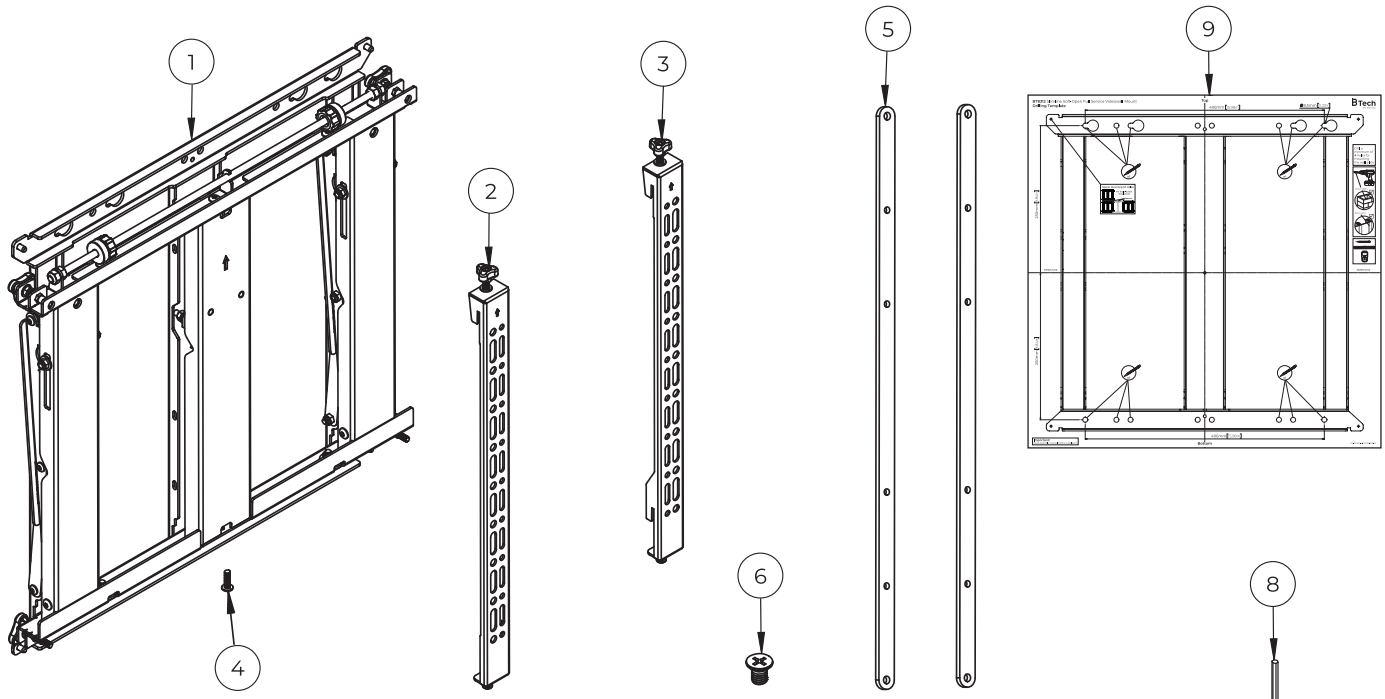

Item	Description	Qty
1	Wall Mount	1
2	Left Interface Arm	1
3	Right Interface Arm	1
4	M6 x 20mm Screw	1
5	600mm Adaptor Arm	2
6	M8 x 12mm Screw	4
7	5AF Hex Key	1
8	4AF Long Hex Key	1
9	Wall Drilling Template	1
Screen Fixings		
A	M6 x 16mm Screw	4
B	M6 x 25mm Screw	4
C	M6 x 40mm Screw	4
D	M8 x 16mm Screw	4
E	M8 x 25mm Screw	4
F	M8 x 50mm Screw	4
G	M6 Washer	4
H	5mm Spacer	4
I	15mm Spacer	4
J	25mm Spacer	4
Wall Fixings		
A1	St8 x 63mm Coach Screw	4
A2	M8 Washer	4
A3	N°.10 x 50mm Wall Plug	4

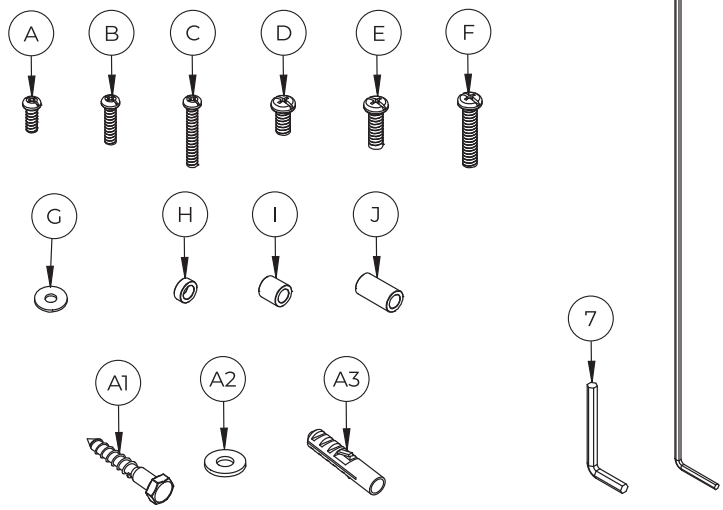

Installation Tools Required

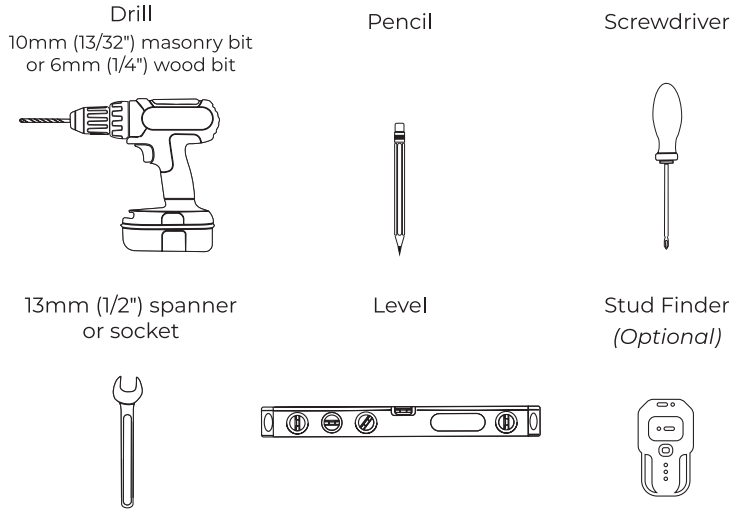

Suitable for loads up to 50kg (110lbs)

Installation Instructions

1. Attach Interface Arms To The Screen

Fix *items 2 & 3* to the back of the screen using *items A-J*.
Use *item G* with *items A, B & C*.
Use spacers *(items H, I & J)* for screens with recessed fixings.
Note: *Items 2 & 3* can mount screens with fixing patterns from 200 x 100mm up to 400 x 400mm.

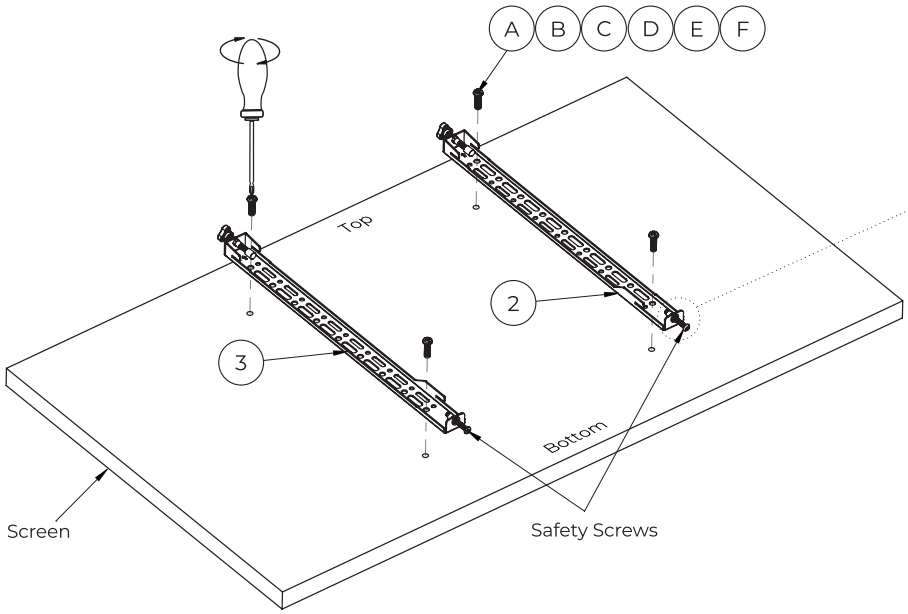

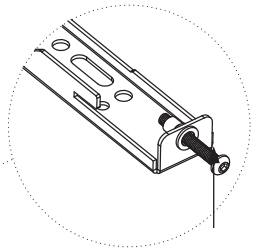

Note: Completely loosen the safety screws on the bottom of *items 2 & 3*.

VESA® 600 Interface Adaptors

To mount screens with VESA 600 x 400mm fixings attach *item 5* to *items 2 & 3* using *item 6*.

Landscape Mounting

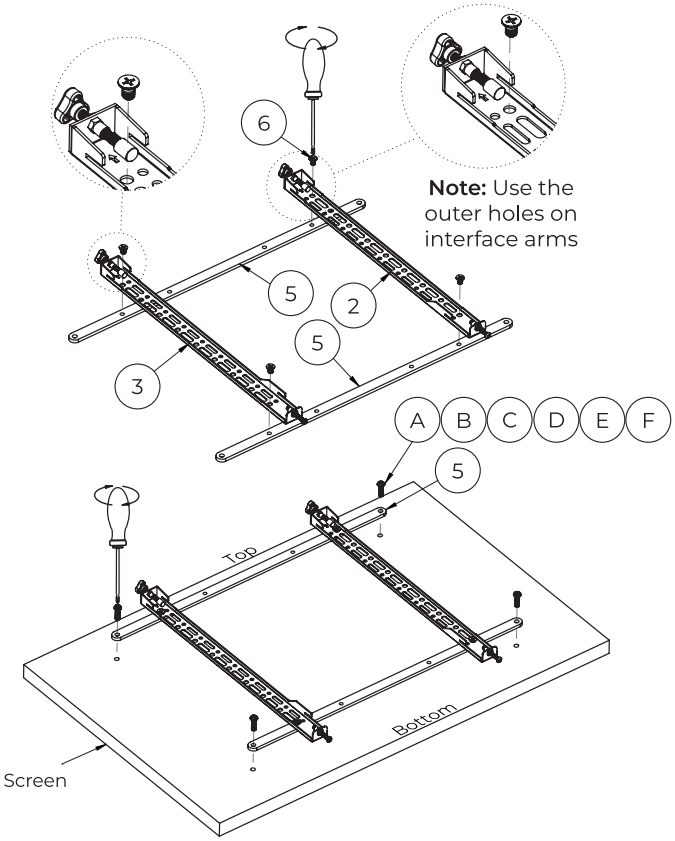

Note: Use the outer holes on interface arms

Portrait Mounting

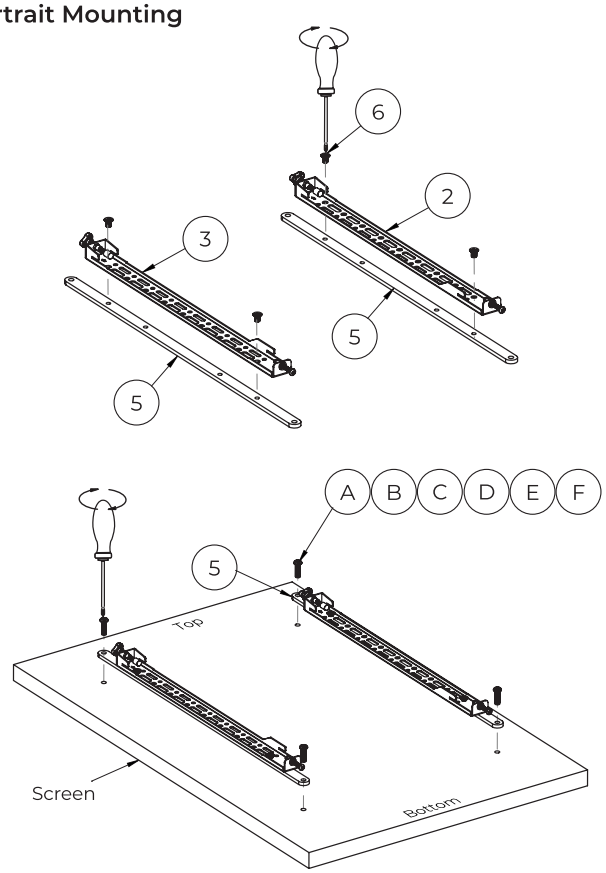

BTech® AV Mounts

2. Install The First Mount

i. Determine the centre of the first mount.

Note: It is recommended to start the video wall installation from the bottom corner of the configuration.

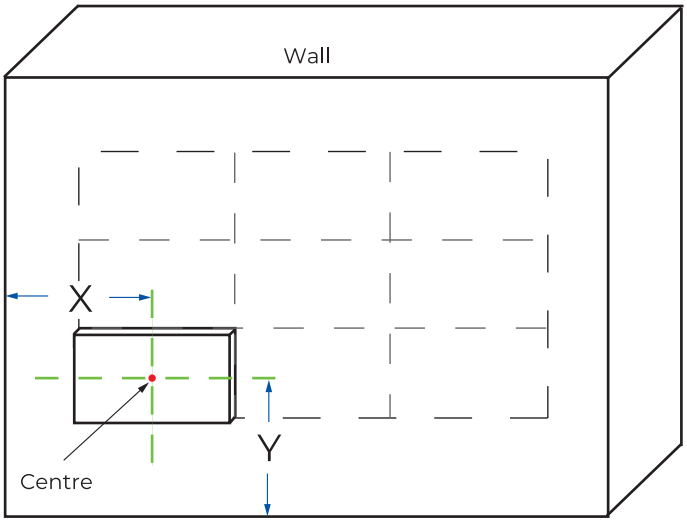

ii. Mark 244mm (9.61") up from centre to mark the top centre hole.
Optional: Use *item 9* to help mark the wall fixings - ***See Fig. 1***

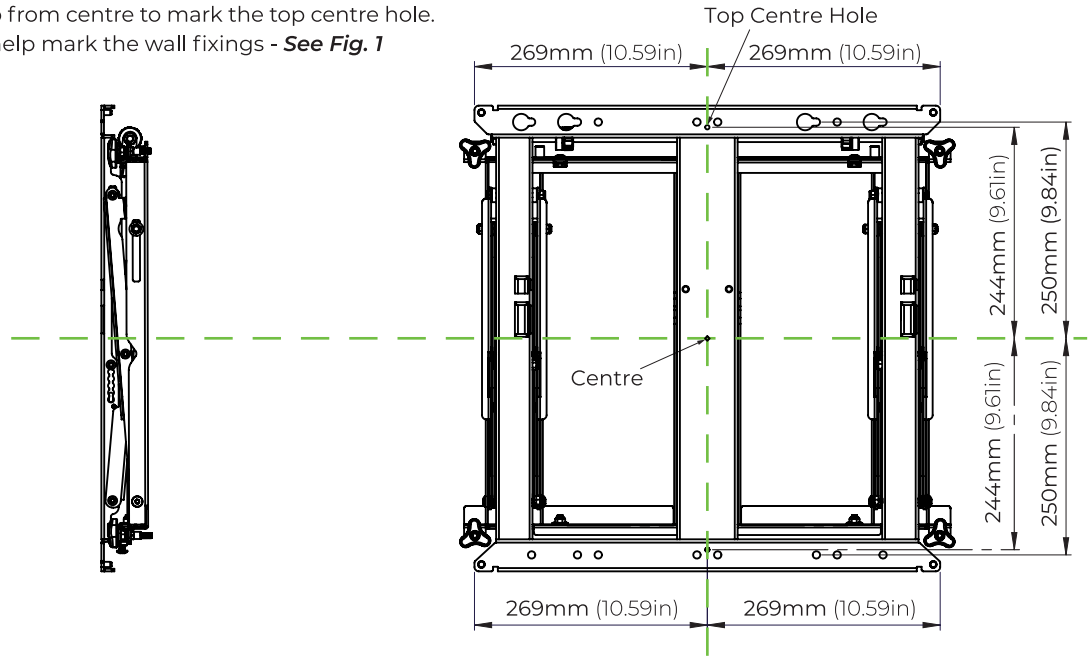

iii. Mark and drill the wall mount fixing holes on the wall, using the horizontal line as a guide.

Fig.1

Optional: Use the drilling temp late *(item 9)* to mark and drill the fixing holes for the wall mount *(item 1)*.

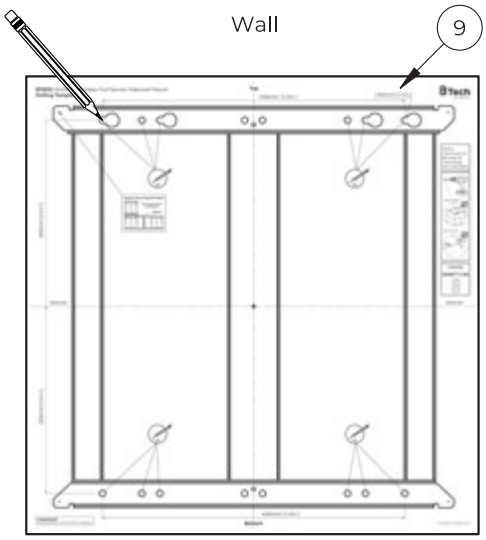

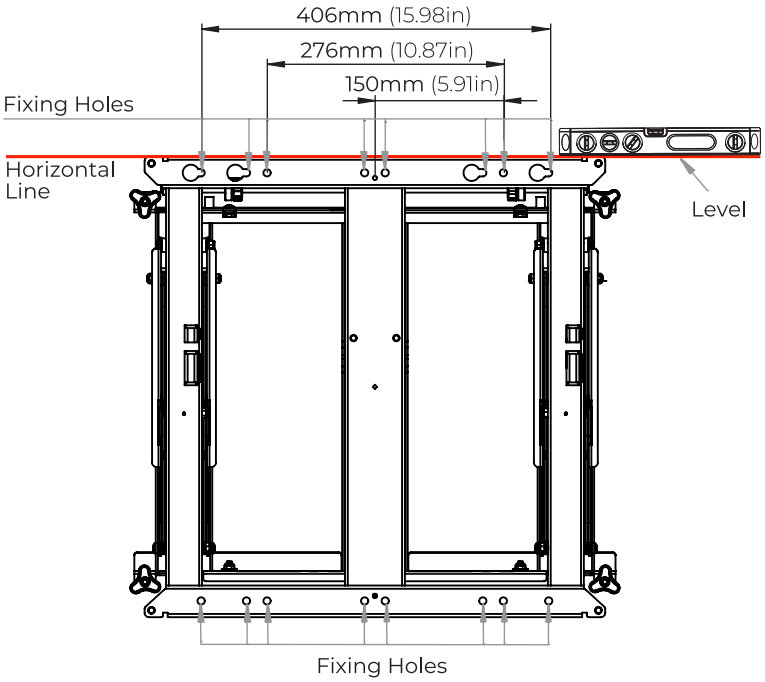

Installation Requirements

On concrete walls insert suitable wall plugs / anchors flush to the wall. Avoid drilling into the mortar joints.
Optional: To help with the install, use *item 9* to mark and drill fixing holes.
Drill holes at least 63mm (2.5") deep. Space the wall fixings evenly across the wall mount.
Minimum distances between wall fixing screws: Width: 252mm (9.92") / Height: 500mm (19.69")
Only suitable for stud walls where the distance between the two studs centres are: 12" (300mm) or 16" (406mm)
Where possible use the maximum distances to help spread the load of the installation.
Please refer to the technical drawing on *page 14* for more information.

Concrete / Brick Wall

i. Insert 2 x *item A1* into the top holes and leave a gap of approx. 10mm (0.4") to hook on *item 1*.
ii. Once *item 1* has been hooked on, tighten all fixings.

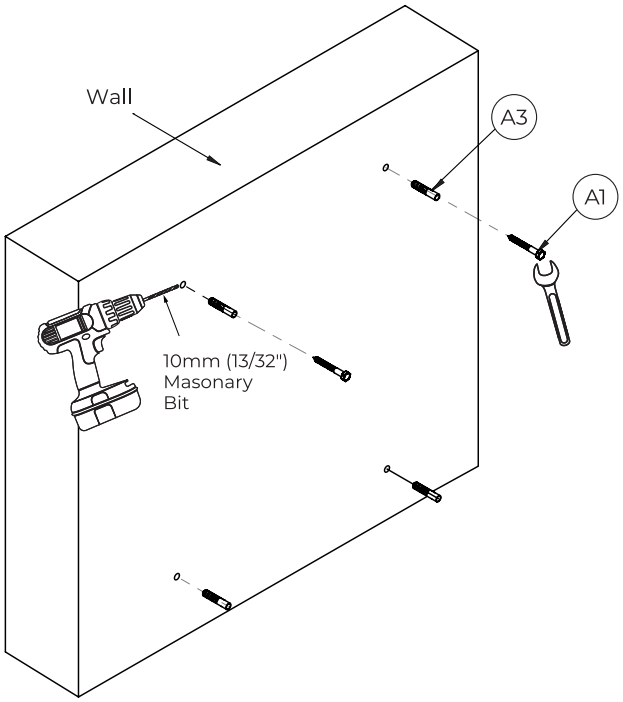

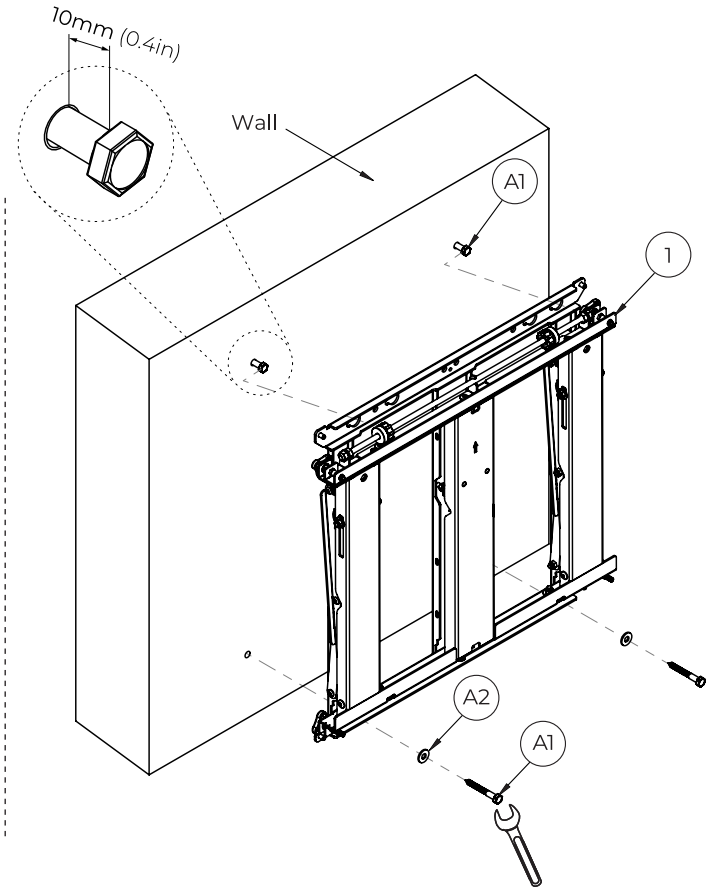

Wood / Stud Wall

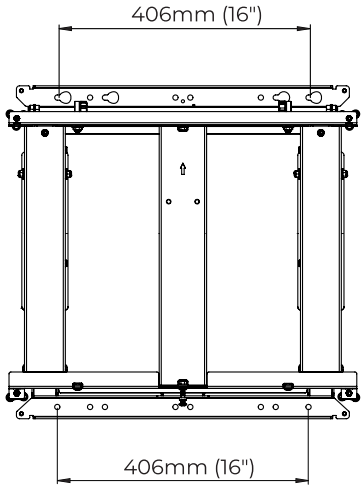

Note: Use only the fixing holes shown for stud wall mounting

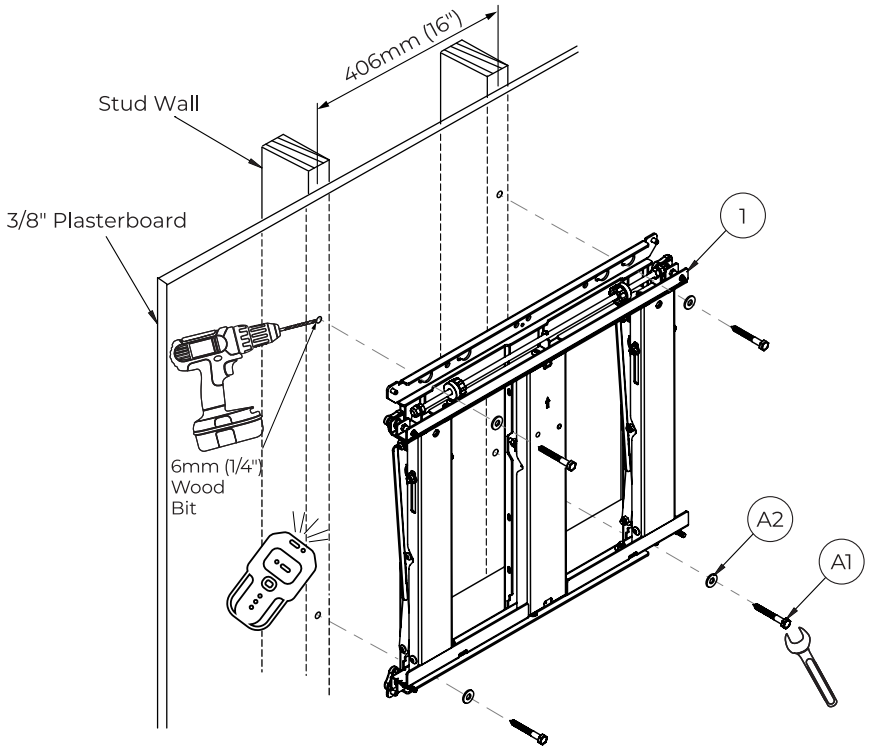

Note: On stud walls use a stud finder to locate and mark stud centre lines.

Mounting Spacer Kits

For quick and easy installation of the video wall mounts, it is advised that a mounting spacer kit is used (sold separately). A different kit is required for each different screen size.

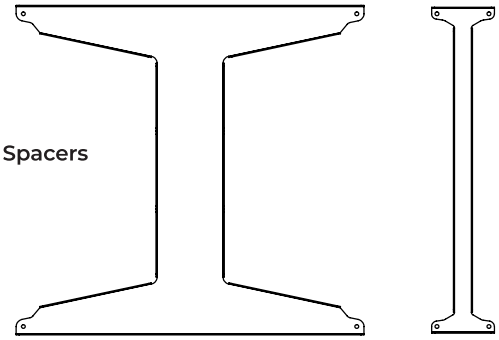

Screen Size	Screen Dimensions	Spacer
46"	1022 x 576mm	BT8312-SP461
46"	1025 x 579mm	BT8312-SP462
47"	1047 x 592mm	BT8312-SP471
49"	1077.6 x 607.8mm	BT8312-SP491
55"	1215 x 686mm	BT8312-SP551
55"	1211.4 x 682.2mm	BT8312-SP552
70"	1543.7 x 870.4mm	BT8312-SP701

For current spacer listings and compatible screen models please visit **www.btechavmounts.com/bt8312**

Example of landscape screen mounting with spacers.

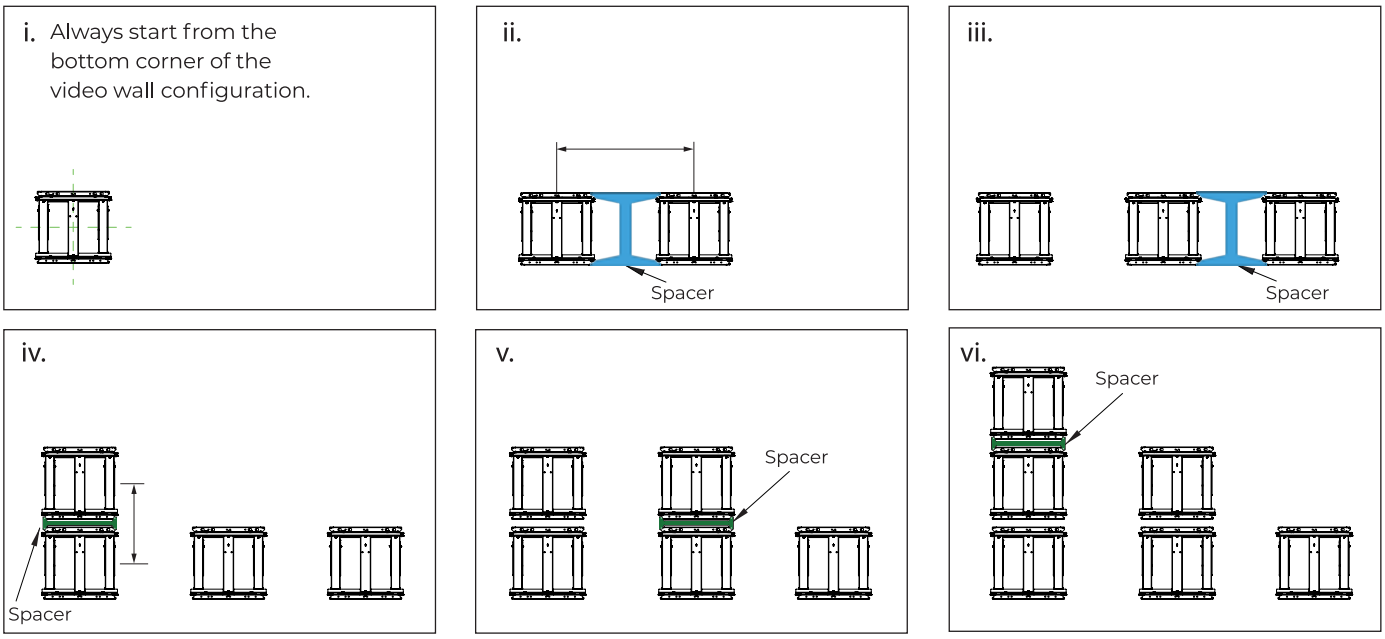

Example of portrait screen mounting with spacers.

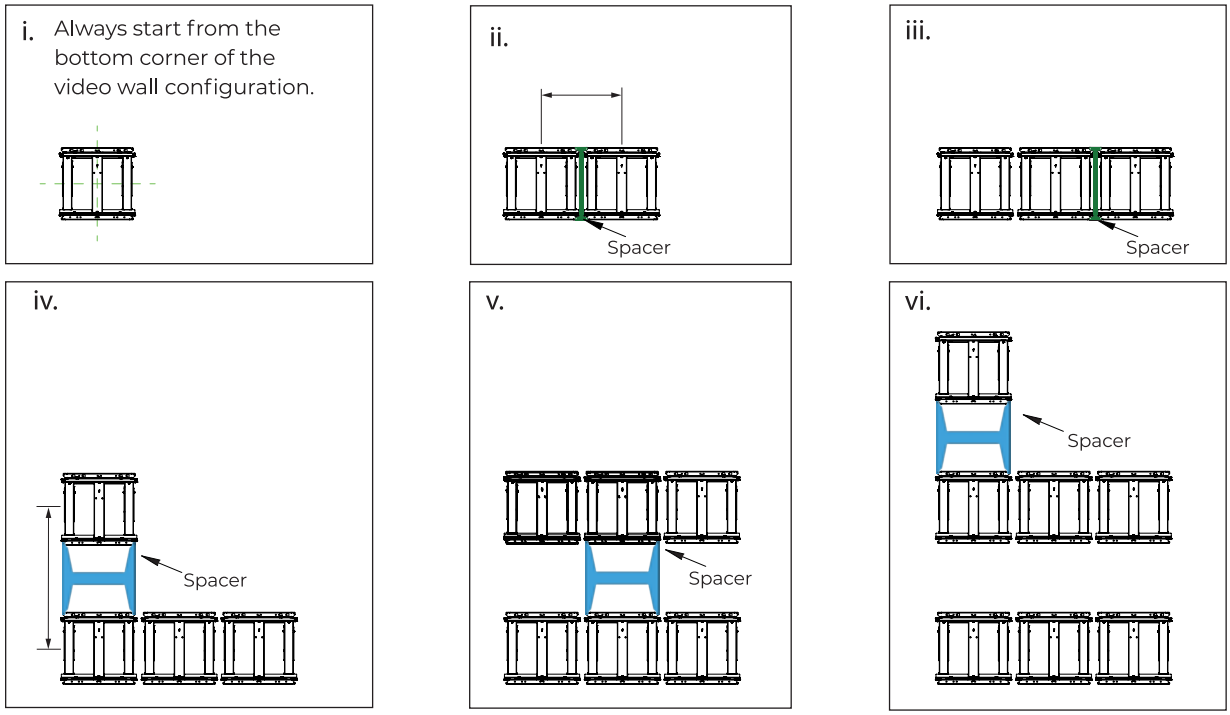

3. Installation & Alignment Of The Additional Mounts

i. Once the first wall mount has been installed, draw a horizontal alignment line or use a laser level to get the alignment line as shown.

Note: Installation shows screens being mounted in a landscape orientation.

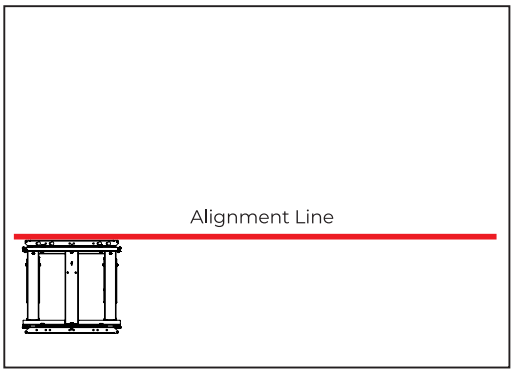

ii. Using the large spacer, place the second wall mount as shown whilst being careful to keep on the alignment line.

Repeat this step to mount the additional wall mounts on this row.

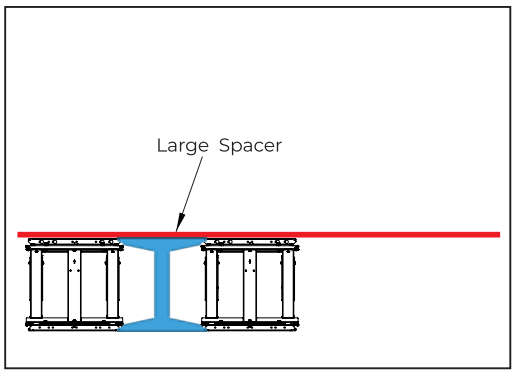

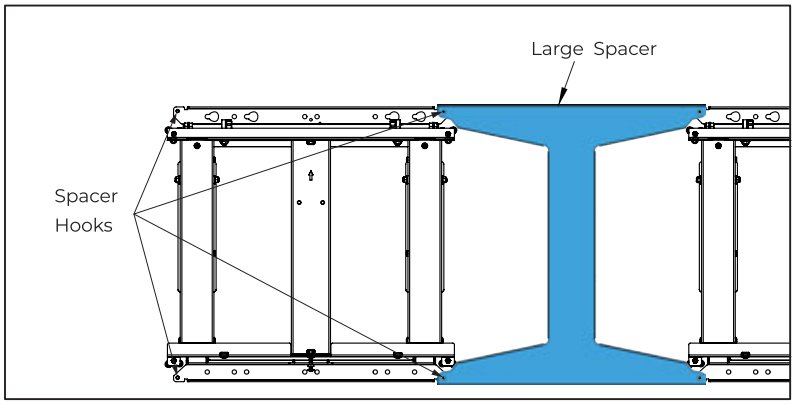

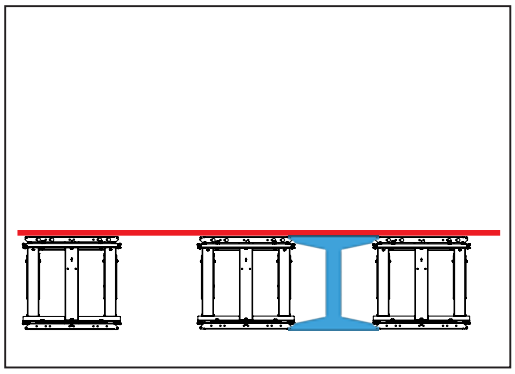

iii. Using the small spacer, place the first wall mount of the next row.

Draw another horizontal alignment line or use a laser level to get the alignment line as shown.

Mount the additional wall mounts.

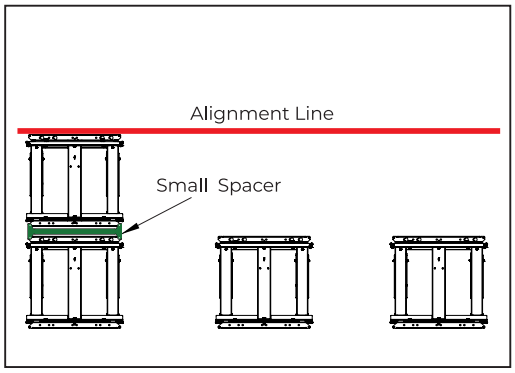

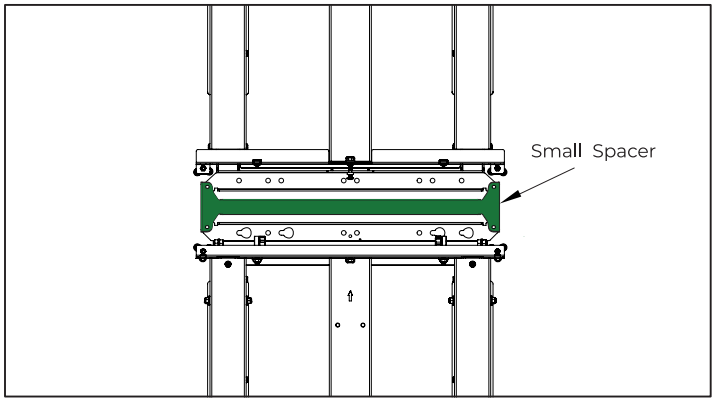

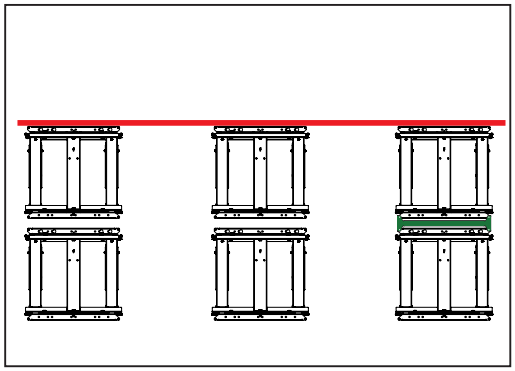

BTech AV Mounts

4. Mount First Screen Onto Wall Plate

Hook the first screen onto the bottom left wall plate *(item 1)*, keep the X axis adjustment knobs between the middle of the two interface arms *(items 2 & 3)*.

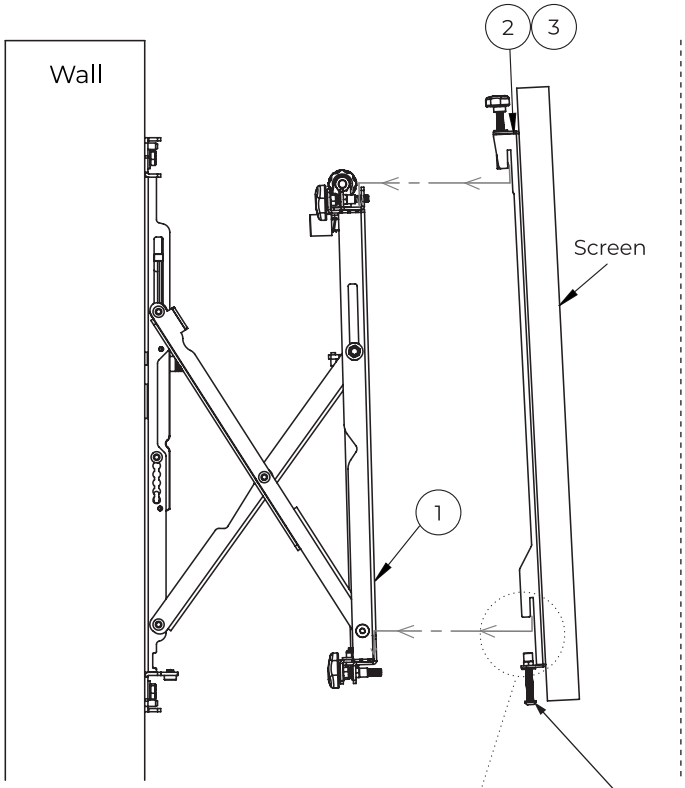

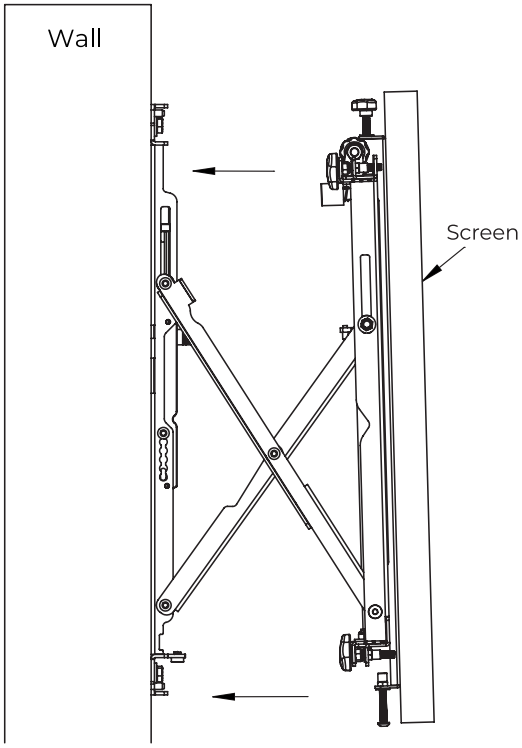

Note: Popped out position is optional. Screens can also be mounted if the bracket is closed.

Important: Safety screws need to be in the unlocked position. Tighten safety screws once all screens are mounted and aligned with each other.

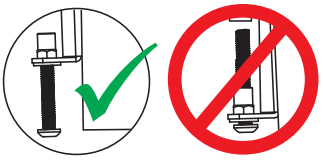

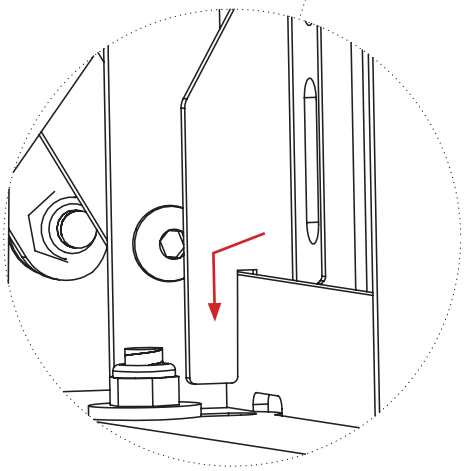

Note: Ensure the bottom interface arm hooks are properly mounted onto the wall plate.

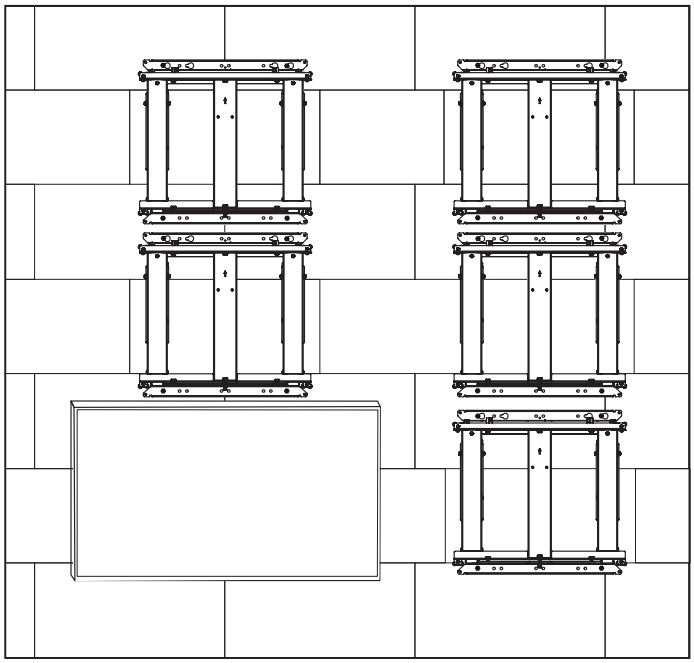

5. Screen Alignment With Micro-Adjustment

i. Check the horizontal centre of the screen is aligned with the horizontal centre of the wall mount.

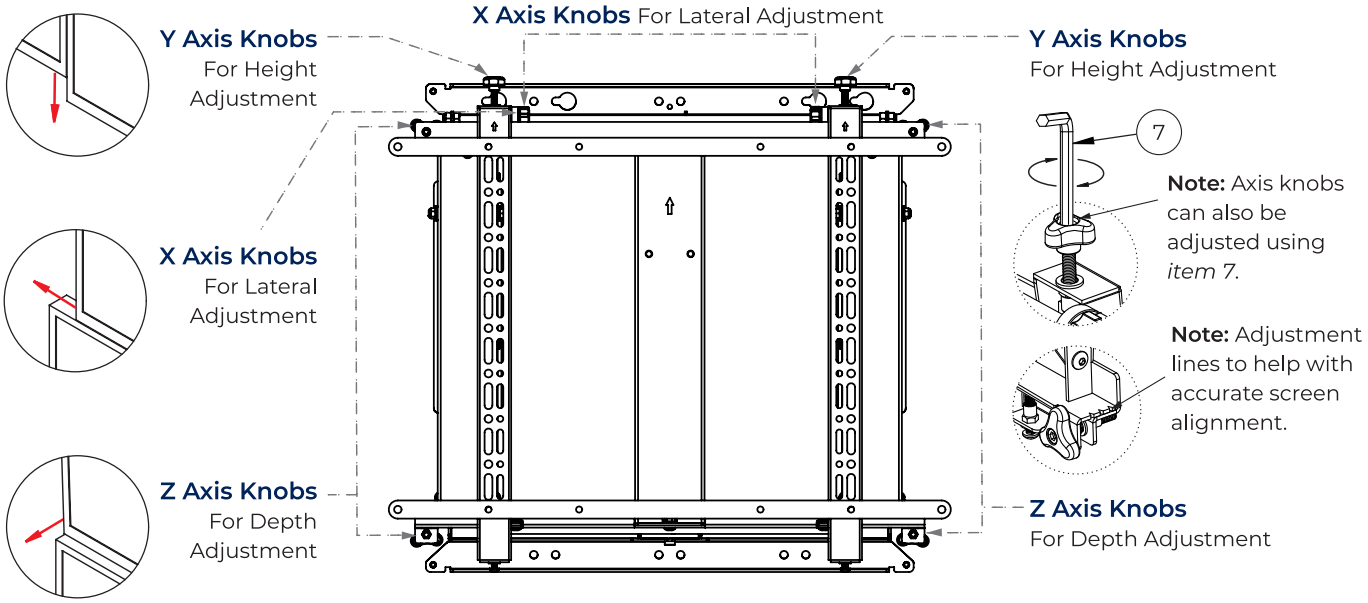

Total **Y axis** adjustment is +15mm (0.6")
Total **Z axis** adjustment is +/-7.5mm (0.3")

ii. **Height Adjustment:** Using a level, align the screen parallel to the floor using the Y axis knobs.
iii. **Corner Depth Adjustment:** Use the Z axis knobs to ensure that each corner of the screen is equidistant from the wall.
iv. Use a plumb to align the first column of screens and leave at least a 1mm (0.05") gap between them.
v. Hook on the remaining screens leaving at least a 1mm (0.05") gap between them.

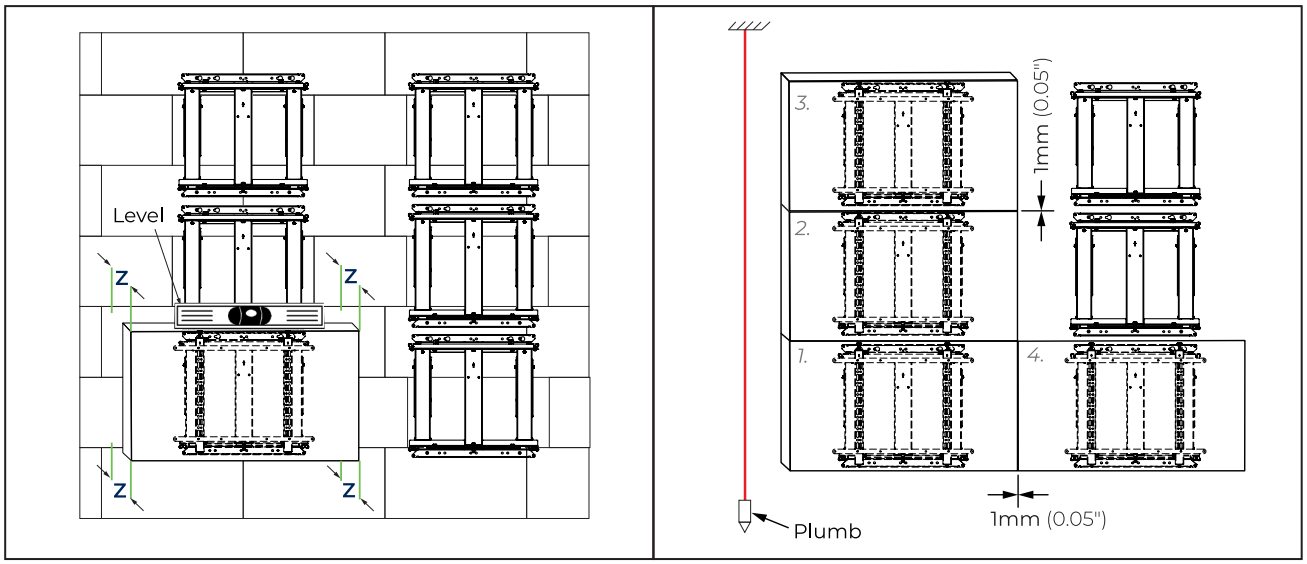

vi. When the screens are all positioned correctly, tighten the safety screws on the bottom of *items 2 & 3*.
vii. Fix cables using the cable fixing holes and cable ties if required.

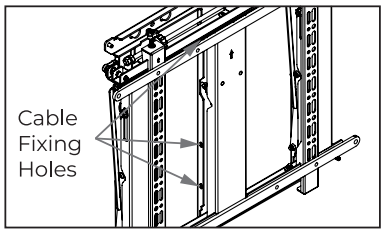

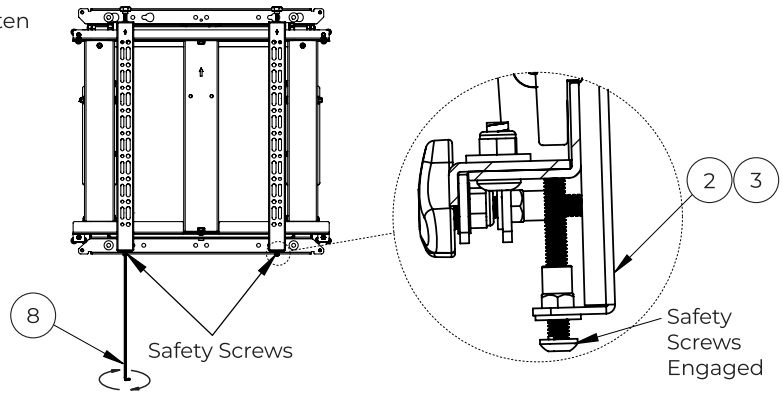

BTech AV Mounts

6. Servicing The Screens

i. To service the screen, push the screen and the mount will release and move out from the wall. Be careful not to damage the screen when pushing.

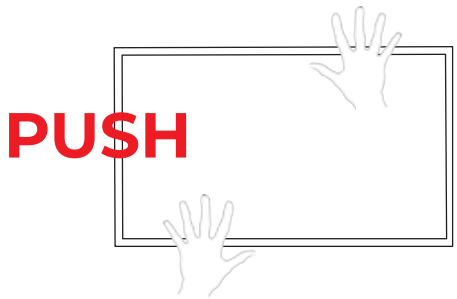

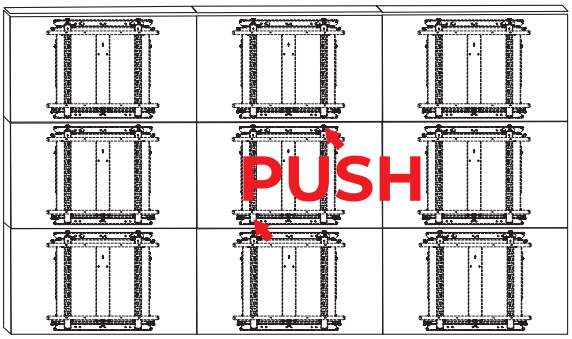

Note: Push at the top and bottom of the screen on the bezel. To avoid any screen flexing (and when spacers have been used) apply light pressure in-line with the interface arms, pushing alternative arms at the top and bottom simultaneously.

ii. Screen shown in the service position.

iii. When servicing is complete, push the screen back and click into place.

Optional:

Adjustment can be made to ensure these parts move freely.
If overtightened it will negatively affect the pop-out/in function of the product.
If too loose, it will create lateral wobble.

Note: If the pop-out function of the bracket is not operating, check that the locking screw *(item 4)* has not been engaged - *see below*.

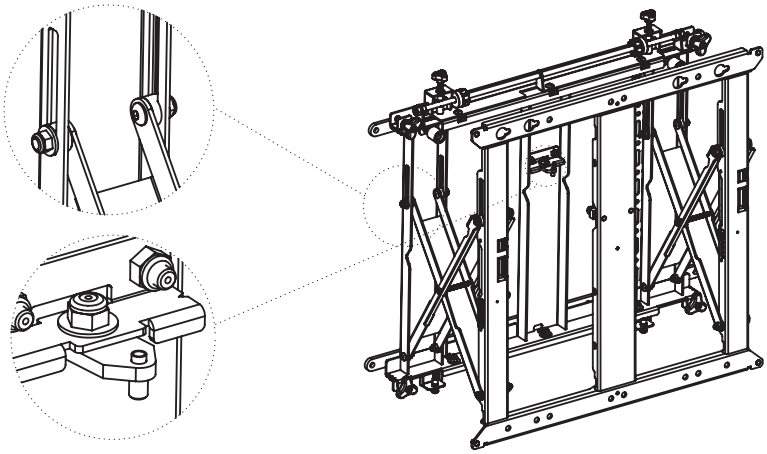

Locking Screw Installation

If this mount is used in public areas, a locking screw *(item 4)* is available to prevent the mount from popping out accidentally.

Note: Ensure *item 1* is in the closed position before inserting *item 4*.

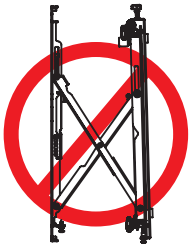

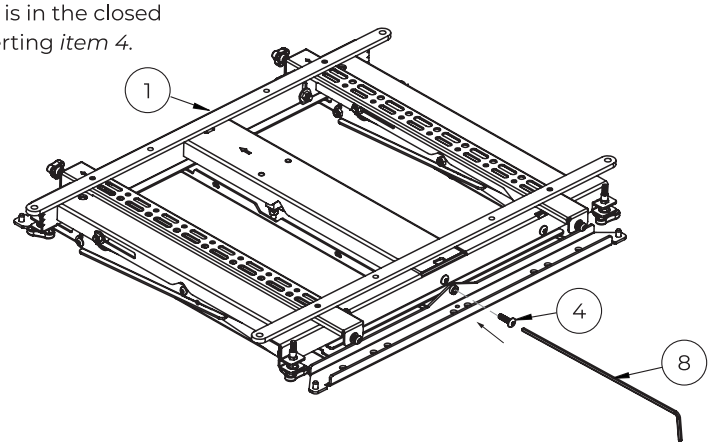

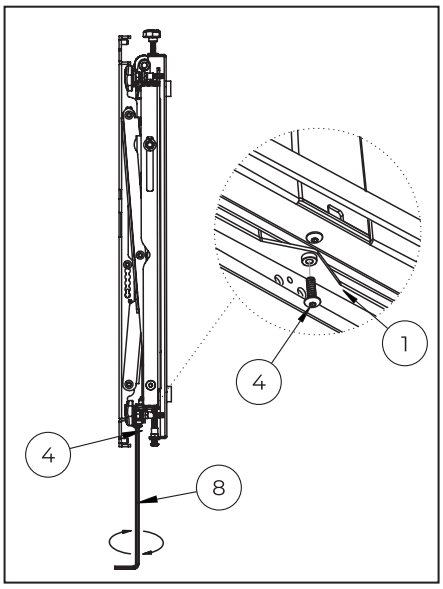

Optional **Fine Adjustment**

Note: The BT8312 is designed to accommodate a wide range of screens. Therefore fine adjustment may be required to optimise the performance.

If the screen isn't stable and rocks when touching in each corner, you can stabilise this by adjusting the locking block (as shown below).

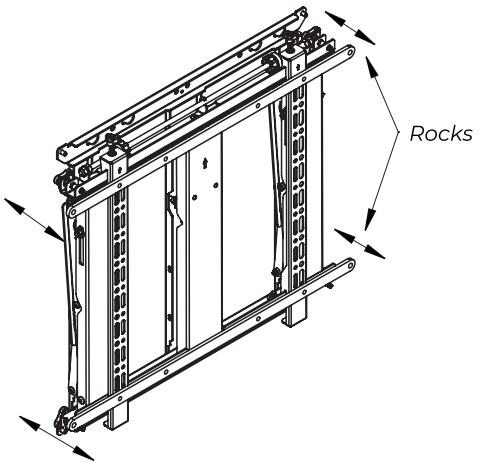

Adjust the locking block back/forward by moving the x4 nuts until the spring loaded bumper sits just off the wall plate face (0.1mm is optimal).

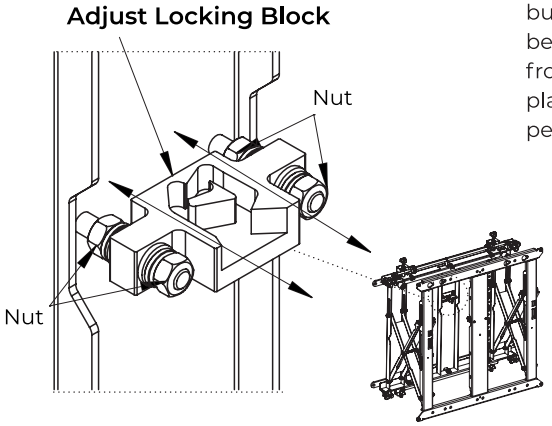

Spring loaded bumpers should be 0.1mm (0.04") from the wall plate for optimal performance

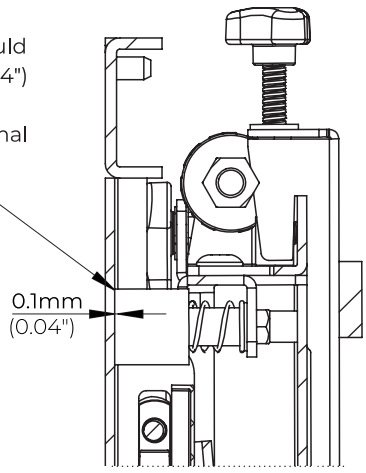

Recess Mounting

Depth of recess = 70mm (2.75")* + Depth of screen
*Add 6mm (0.25") if 600mm adaptor arms *(item 6)* are used.

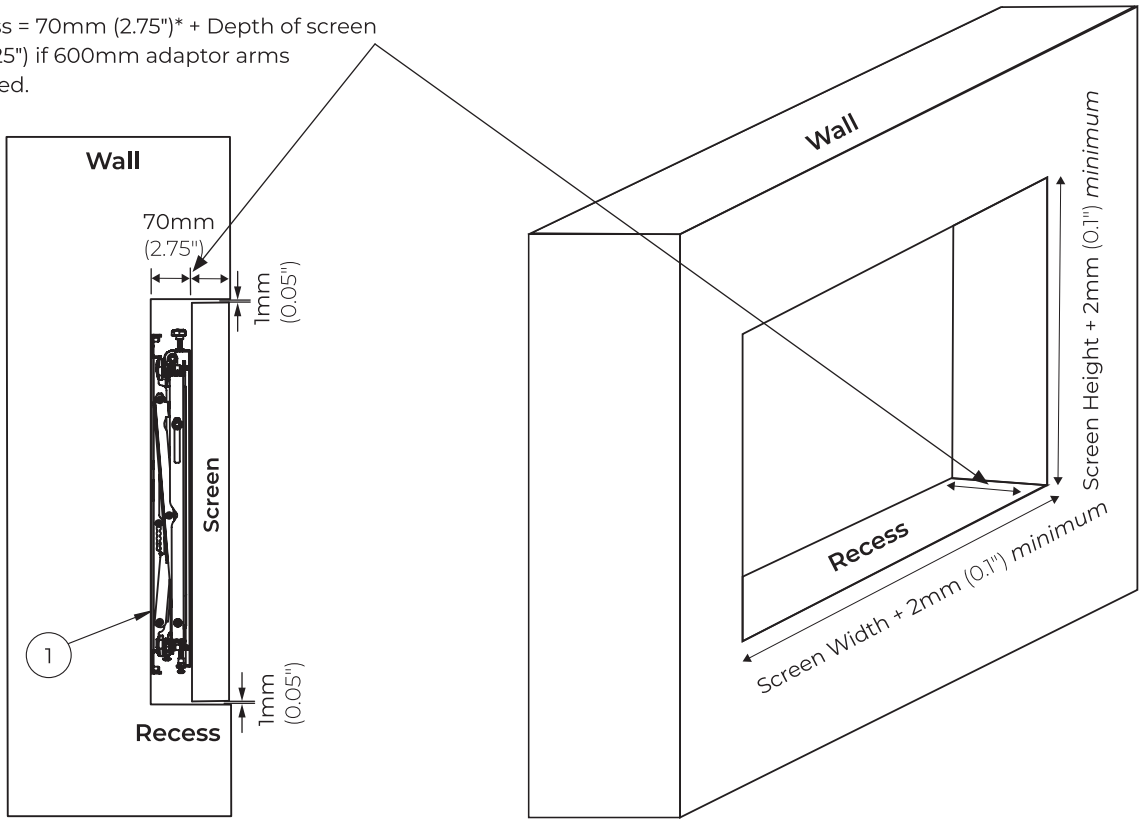

BTech AV Mounts

BT8312 **Dimensions**

Please keep this for future reference

Front View

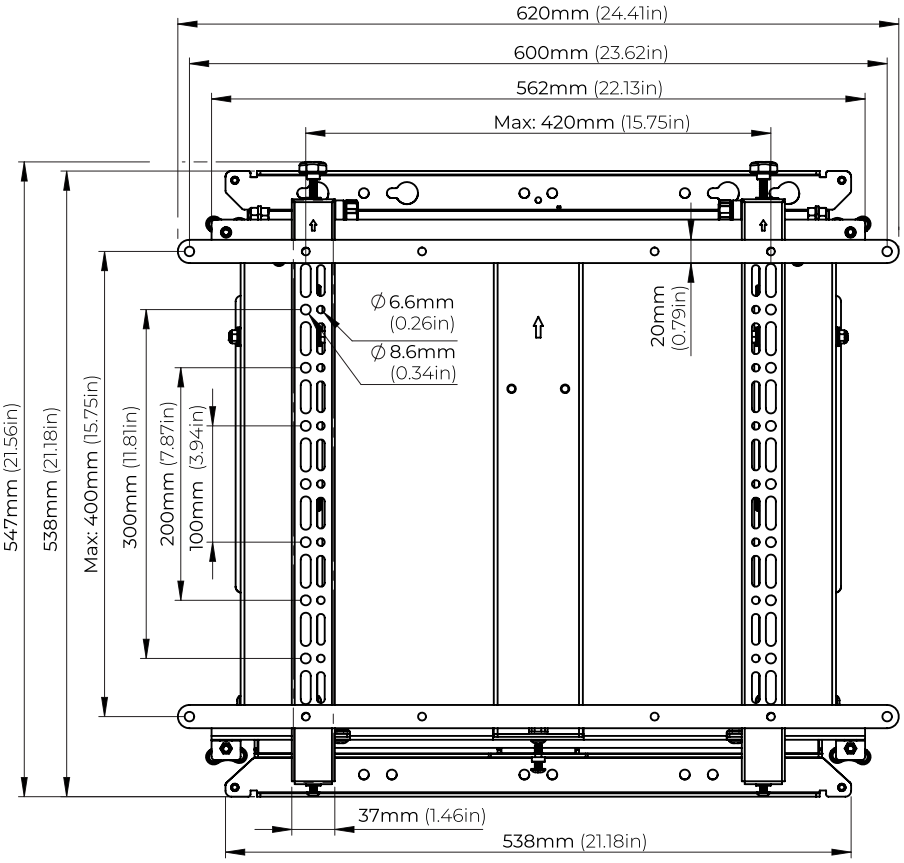

Rear View

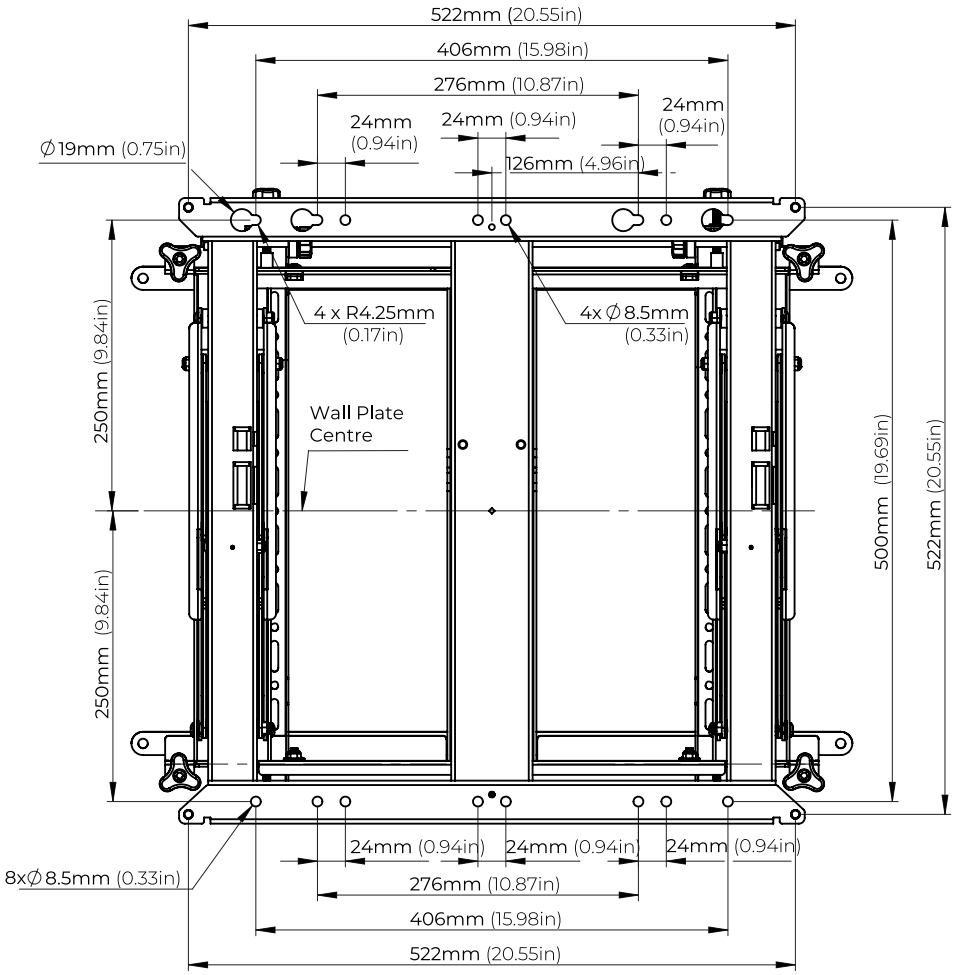

Closed State

Side View

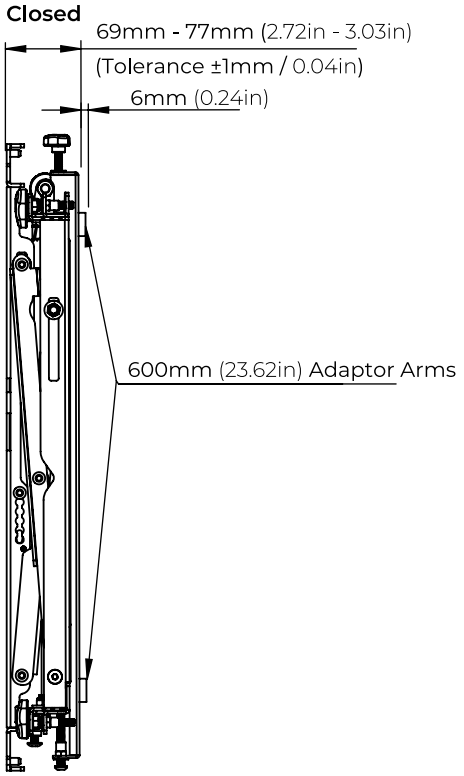

Top View

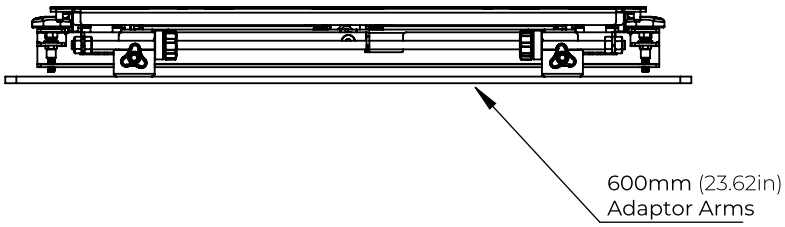

Open State

Side View

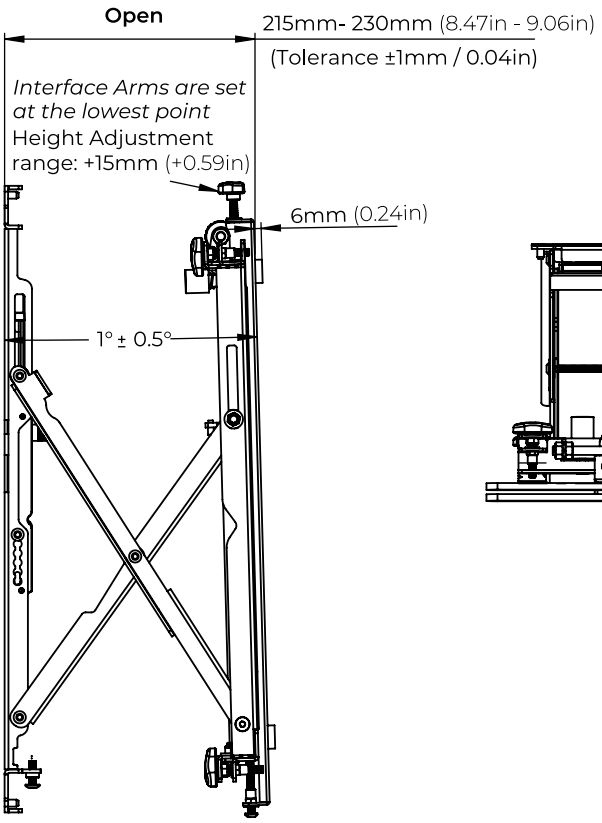

Top View

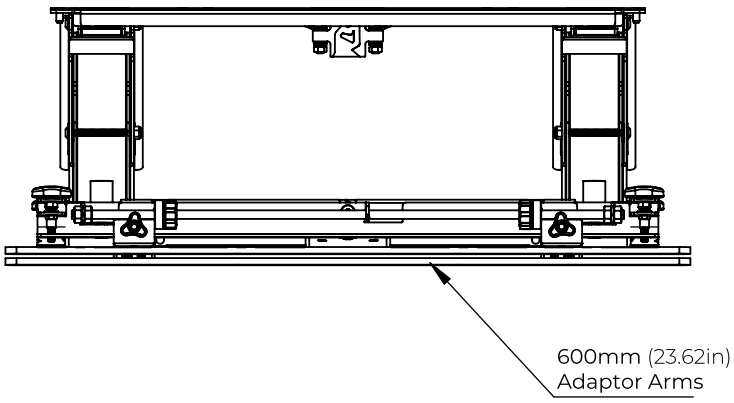

Warning!
Fix / tie the cables to Prevent possible damage

These instructions are intended as a guide only and B-Tech accepts no liability for the accuracy of the information contained in this document

BT8312

Contact: info@btechavmounts.com

©2023 B-Tech AV Mounts Corporation Ltd. All rights reserved.

B-Tech AV Mounts and the B-Tech logo are registered trademarks.
All B-Tech images and symbols are exclusive property of B-Tech AV Mounts Corporation Ltd.
All other brands and product names are trademarks of their respective owners.
Any reproduction, retransmission or republication of any part of this manual is strictly prohibited, unless prior written permission has been granted by B-Tech AV Mounts Corporation Ltd.
Photographs are for illustrative purposes only. E&OE

Patent Numbers: GB2604327 / US 11,841,111 B2

AMA-BT8312V2-V3.1-1123-03 Made in the P.R.C.